INTERNATIONAL JOURNAL OF CREATIVE MEDIA RESEARCH

Vol.14, October 2026

Integrated Learnings with Integrated Virtual Production Technologies

DOI: https://doi.org/10.24135/ijcmr.v14i2.174

L. Nicol Cabe, ORCID: 0009-0003-9845-7390

Paul Kiama Irungu, ORCID: 0009-0009-5990-9909

Fabian Ferley, ORCID: 0009-0001-6539-6160

Jason Bevan, ORCID: 0000-0002-4484-5166

Cameron Mackness, ORCID: 0009-0009-0769-9460

Flinders University (Australia)

Abstract

The Void at Flinders University is an immersive virtual production (VP) studio designed to support teaching, research, and creative practice across multiple disciplines. Its affordances and innovations were documented in *Beyond Virtual Production: Integrating Production Technologies* (Barnett *et al*., 2025), and continuing developments in VP technologies, institutional requirements, and creative applications have presented new challenges for educators seeking to maintain pedagogically relevant production environments.

This article examines The Void's challenges through a practice-based case study by Masters of Virtual Production students Fabian Ferley and Paul Kiama Irungu. Drawing on reflective analysis of their major projects, the study explores how the redevelopment of a university-operated VP facility differs from commercial VP studios. The project involved improving core studio infrastructure while responding to the competing demands of teaching, research, and creative practice within a multidisciplinary educational setting.

The Void functions as a laboratory for experimentation for students, academics, and creative industry workers, suggesting that practice-based VP education benefits from embracing technological change as a core learning condition rather than a problem to mitigate. The study contributes to discussions of virtual production pedagogy and practice-based media research by demonstrating how educational VP spaces can support innovation, interdisciplinary collaboration, and adaptability.

Introduction

The Void at Flinders University in Adelaide, South Australia has been the subject of ongoing pedagogical and practice-based research since it opened in 2020. In *Beyond Virtual Production: Integrating Production Technologies*, Barnett, Bevan, Mackness, and Wallin (2025) documented the studio's development as a multidisciplinary immersive production environment and explored its role in supporting teaching, research, creative practice, and industry engagement. This article builds on that work by examining how The Void has continued to evolve in response to changing virtual production technologies, institutional requirements, and educational needs through a specific case study involving two recent graduates' masters' project.

Virtual production (VP) refers to a range of integrated digital and physical production technologies that enable the creation, visualisation, and capture of virtual and live-action content in real time. These workflows commonly combine game engines, LED volumes, motion capture, virtual cameras, real-time rendering, and related digital production tools (Ferley and Irungu, 2025). These tools also converge across processes traditionally separated in different workflows during pre-production, production, and post-production; by integrating them in a single VP process, directors, cinematographers, and other creative team members are able to actively collaborate in a shorter span of time.

The growing use of VP technologies in creative industries has prompted universities to explore how these workflows can be incorporated into teaching, research, and creative practice. However, VP presents unique challenges for higher education. Unlike more established production technologies, VP systems are characterised by rapidly evolving software, hardware, workflows, and professional practices. New developments in real-time rendering, game engines, extended reality technologies, and artificial intelligence (AI) continue to reshape production possibilities while also raising questions about the longevity of specific tools and workflows. As a result, educators must balance teaching current industry practices with developing adaptable skills which can remain relevant amid ongoing technological change.

The Void at Flinders provides an example of how these challenges can be addressed within a university setting. While capable of supporting contemporary VP workflows, The Void operates as a shared institutional resource that serves teaching, research, and creative projects across multiple disciplines. This position allows the studio to support experimental and interdisciplinary approaches that extend beyond strictly commercial production

models. As Bevan and Mackness (2025, p. 49) note, the facility has enabled the development of integrated pipelines combining film, game, and live-performance technologies in response to diverse project requirements.

This article examines how a university VP environment can respond to technological change through a case study of major projects undertaken by Masters of Virtual Production students Fabian Ferley and Paul Kiama Irungu. Their work focused on upgrading and extending The Void's technical infrastructure while navigating the practical constraints of a higher education environment. Through reflective analysis of these projects, the article explores how practice-based learning can prepare students to operate within production contexts characterised by technological uncertainty, interdisciplinary collaboration, and ongoing change.

Background: The Void as a Unique Site of Practice Research

In the broader university context, preparing students to work in the VP industry does not only involve teaching proficiency in a fixed set of technologies. Instead, higher education must provide a facsimile of industry-standard spaces while developing flexible VP facilities allowing varied usages, like academic and creative research, and rapid technological advances. This creates a particular pedagogical problem: universities must provide students with meaningful access to rapidly evolving, expensive production environments. Changes in production economies, the development of AI-assisted production tools, and the rapid evolution of VP workflows mean that specific technical skills may have a brief professional lifespan. For universities, therefore, the challenge is not simply to reproduce current industry practices but to develop graduates who can understand and adapt to emerging production environments. In this context, VP facilities can provide an important educational space in which students encounter both the capabilities and limitations of contemporary production technologies.

To support this emerging area of education and research, an increasing number of universities have developed VP and motion-capture facilities, including in Australia, as outlined in Appendix B. Facilities range from dedicated screen-production facilities associated with Film and Television degrees, through broader facilities supporting film, television, games, animation, and immersive media, to interdisciplinary research environments in which virtual production (VP) is one capability among several. These facilities provide students with opportunities to engage directly with emerging production technologies while also enabling academic researchers, educators, and students from disciplines beyond screen production to explore their affordances for diverse research and creative purposes (Barnett *et al.*, 2025, p. 1). Flinders University's The Void is not embedded

exclusively within a single academic discipline, enabling the facility to develop beyond a conventional training studio into a multi-use environment. This organisational positioning has supported a distinctive approach to VP education, in which students encounter these technologies not simply as tools to be mastered, but as components within evolving creative, technical, and interdisciplinary workflows. Consequently, The Void provides a useful case through which to examine how the institutional and disciplinary context of a VP facility can influence the ways in which these technologies are incorporated into higher education.

At the end of 2023, as the final edits to chapters for *Beyond Virtual Production: Integrating Production Technologies* were being sent to the publisher, The Void at Flinders University received significant technological upgrades, which are described in Appendix A. These upgrades expanded the technical capabilities available to students and researchers at the university, but they also illustrate the pedagogical challenge identified above: a contemporary VP facility is a complex technological ecosystem rather than a single piece of equipment or a stable production method. This understanding of evolving VP studio applications is reflected in Jason Bevan's and Cameron Mackness's practice-based pedagogy, which stems from broader concerns about training programs and university system processes.

Literature Review

The rapid rise in and evolution of virtual production methods used in film and videogame creation has led to a dearth of trained VP specialists fluent in the latest technologies. Swords and Willment (2024) describe the problem of not only training future employees, but the uncertain process of developing VP technologies at all:

> … on which technologies are resources being focused? Who is undertaking R&D? Where is R&D being done? Are virtual production techniques being concentrated in certain parts of the filmmaking process or influencing the whole pipeline? How will workflows be integrated in the next iteration of virtual production technologies? How will AI and sophisticated image processing algorithms change virtual production approaches? (p. 1568)

Educators have observed the constant updates aligned with these pertinent questions, and wondered not only how to support development of these technologies, but how best to teach them when the industry itself remains so uncertain about 'the next big thing'. Swords and Willment further report that "[w]hole new departments are emerging" because of

virtual production technologies and their evolving workflows; "it is important to understand who is in the best position to provide those skills and help remove barriers to entry" (Swords and Willment, 2024, p. 1570). Raimundo *et al.* (2025) also discuss the rapid pace of VP tech development as a hindrance for adoption of tools within university-level education settings, requiring adjustments to pedagogical practice so students are prepared for rapidly evolving work environments.

Boutellier and Raptis (2023) write: "Given the newness and unfamiliarity of these technologies, one of the key issues with providing virtual production training to students is the need for educators to be trained first" which puts university educators like those at Flinders University at risk of a 'skills lag' while VP technologies continue to rapidly evolve within the industry (p. 70). Universities are not only situated to engage in research and development for industry outcomes, but to uniquely educate future VP employees for flexibility, curiosity, communication, and creativity in the face of cyclical changes to both hardware and software – as Boutellier and Raptis continue: "Today's students need to be independent learners who can work and collaborate across disciplines with other co-creators" (p. 70). The VP training programs in The Void at Flinders University approach pedagogical processes with this type of flexibility and independence as core skills.

The Void's upgrade and subsequent learning environment encouraged skills acquisition via Ferley's and Irungu's master's project. The pair were required to analyse The Void's hardware and software for upgrades, which not only required gaining technical skills but 'soft skills' like implementing iterative research methods, managing numerous scheduling conflicts within the space, and negotiating with Flinders' IT department, Information and Digital Services (IDS). The following Case Study section begins discussion and analysis of their project and findings.

Methodology and Practice Research Approach

This article incorporates interviews with the teaching specialists and the two master's students regarding their major project undertaken by Masters of Virtual Production, along with components from that final major project which used practice-based iterative methodologies to upgrade hardware and software in the virtual production volume.

Data Sources

The analysis draws on three primary sources of data:

- Ferley and Irungu's final masters project reports and associated technical documentation, which uses their practice-based methodology;

- A semi-structured interview conducted with Ferley and Irungu in July 2025, focusing on their project objectives, decision-making processes, challenges, outcomes, and reflections on learning;
- A semi-structured interview conducted with educators Jason Bevan and Cameron Mackness in August 2025, examining the changing role of The Void, its pedagogical applications, and the impact of the student-led upgrades on teaching, research, and creative practice.

Research interviews with Ferley and Irungu, and Bevan and Mackness, were undertaken as part of the documentation project *Documenting Practice-Based Research in The Void Motion Capture Studio at Flinders* (Flinders University Human Research Ethics Committee Approval No. 8674; approved 19 May 2025). All participants provided informed consent for their contributions to be included in research outputs. Given that the students are identified by name and their project work forms a central component of the case study, their participation as named contributors was discussed and approved through the ethics process.

Fabian Ferley and Paul Kiama Irungu are two recent master's degree recipients from Flinders University whose work in virtual production focused on improving The Void to become the highest quality Virtual Production studio possible. In their major project used as the case study for this article, they note that "the project was driven by a clear purpose: to address the technical and operational limitations that had hindered the studio's effectiveness in delivering high-quality virtual production experiences" (Ferley and Irungu, 2025). Though The Void had undergone a major upgrade prior to Ferley's and Irungu's course beginning, there were components that remained uninstalled or un-upgraded. Irungu, for instance, noted that there were multiple examples of signal downscaling, older versions of software limiting feature use, and other issues that prevented the highest possible professional quality. As a practical project, they started aiming to update The Void to meet industry VP standards, but through their work, they uncovered compromises related to the volume's relationship within an academic institution.

Research Design and Analysis

Qualitative research interview data was analysed using grounded theory and thematic coding emphasising phenomenology (the students' and teaching experts' lived experience of their practice), which shifts into generating 'an abstract analytical schema of a process' with a method like grounded theory (Cypress, 2015). Grounded theory and thematic analysis are widely accepted data analysis methodologies for qualitative research, encouraging routine, consistent, and systematic review of written data like interview

transcripts to discover new insights and connections by breaking down information into smaller, grouped components (Chun Tie *et al*., 2019). In this research, interview themes supported the organisation of and expansion on Ferley and Irungu's major project data.
The students' original projects employed an iterative practice-based methodology to investigate and improve the technical and operational capabilities of The Void. Rees Lewis *et al*. (2023) describe iterative practice as a cyclical process involving the identification of problems, development of possible solutions, testing, evaluation, and revision. Ferley and Irungu adapted this approach through four interconnected stages:

Problem identification: Mapping existing infrastructure, hardware, software configurations, and production workflows to identify technical limitations affecting production quality, creative flexibility, and operational efficiency.
Investigation: Reviewing technical documentation, industry practices, software resources, and relevant literature to identify potential solutions.
Implementation and testing: Deploying proposed solutions within the operational studio environment through repeated cycles of configuration, testing, troubleshooting, and refinement.
Evaluation and reflection: Documenting successful interventions, ongoing limitations, unresolved issues, and recommendations to support future development of The Void.

Participant Roles
The authors occupy multiple roles within this research context. Jason Bevan and Cameron Mackness are educators and supervisors associated with The Void and the Masters of Virtual Production program, while Ferley and Irungu were student researchers whose projects focused on upgrading and extending the studio's technical capabilities. The students are therefore discussed both as participants in a pedagogical process and as contributors to the practice-based knowledge generated through that process.

The present article does not evaluate the technical outcomes of these projects in isolation. Rather, it analyses the documentation and interview data to understand how practice-based learning occurred within a rapidly evolving virtual production environment. Through thematic analysis of participants' reflections, project outcomes, and documented decision-making processes, the article identifies broader insights regarding adaptability, technical problem-solving, interdisciplinary collaboration, and the distinctive requirements of university-based virtual production facilities. In this way, the students' practical work serves both as a site of learning and as a source of research knowledge, illustrating how practice-

based inquiry can generate insights relevant to virtual production pedagogy and media practice research.

The Problems Encountered

In late-2023, The Void received several key hardware upgrades significantly improving the space, but even after official reopening in 2024, not every upgrade was finalised. Some of the key pieces of the upgrade lay dormant for more than a year. During this period, Ferley and Irungu each undertook projects within the space as members of separate productions that encountered workflow limitations which could have been resolved with the hardware already available in The Void and freely available software configurations. These pending upgrades became the starting point for Ferley and Irungu's work as their initial drive was to learn a higher technical level of configuration and operation for industry-standard VP stages.

Most important among these unfinalized improvements was the final setup of the Render Nodes: powerful purpose-built computers that would handle the rendering of content on the LED wall at its native resolution so that other systems in The Void could have their computing resources used more effectively and without bottleneck. Up to that point, a single system in The Void handled both the role of controlling the virtual scenes and rendering it to the LED wall, requiring two instances of Unreal Engine to run on it simultaneously and thereby compromising on the performance and experience of both roles.

Furthermore, Ferley and Irungu experienced, through their degree practice and projects, that there were several additional ways that The Void's virtual production capabilities fell short and compromised the quality of any projects undertaken within the space, namely:

Lack of a system/software in place to enable file synchronisation between computers and versioning: The existing workflow required manually copying files over the network or with detachable storage media and making manual backups that significantly increased storage size requirements. nDisplay, which is Unreal Engine's multi-screen rendering utility, would also not run reliably unless every node and editor computer had the same files necessitating a manual file copy to every system every time you closed it down and wanted to relaunch the scene with any saved changes, which was an extremely time-expensive process.

No way to play back 2D content (like videos) at native 5.3K resolution on the LED wall: Up to that point, any 2D content displayed on the LED wall was output at a limited resolution which affected the quality of any In-Camera VFX shots in the space.
Overly sensitive camera tracking introducing micro jitters: While great for motion capture work, The Void's Vicon setup was extremely sensitive with even minor camera adjustments introducing noticeable jitter in the digital camera projection. Greater stability was desired for camera movement in the space especially since the goal of In-Camera VFX is to nail the shot completely in-camera.

Limited virtual scouting and live editing capabilities outside of desktop-level applications: There already existed official virtual scouting and editing tools that were freely available and had been used by Ferley and Irungu outside The Void that they felt would add a lot of flexibility and workflow improvements to productions inside it, where they were designed to be used.

No timecode sync for 3D content recorded through Unreal Engine: While timecode and genlock were fed to every system, camera, and controller that needed it, it was never recorded inside of Unreal Engine for use in post-production. One of Ferley's previous projects in The Void that had shots that needed some additional work in post-production quickly discovered this issue. There was no way to match the recorded shot with animated elements in the scene.

The Constraints

The primary constraints the pair faced can broadly be classified into: 1) learning and altering the technical configuration of The Void and 2) access to the space and permission to alter its locked-down equipment. The latter hurdles are specific to multipurpose or shared (educational) spaces as students.

Existing Technical Configuration

It was important to analyse and upgrade the space while maintaining The Void's multipurpose institutional uses for research, teaching, and commercial activity. Ferley and Irungu were particularly interested in being able to drive content on the LED wall at high native resolution, but any outputs going through The Void's video matrix switch were standardised to Full HD for greater compatibility with the varied sources and displays in the space. This necessitated an approach that bypassed this restriction by directly outputting the Render Nodes to the LED wall.

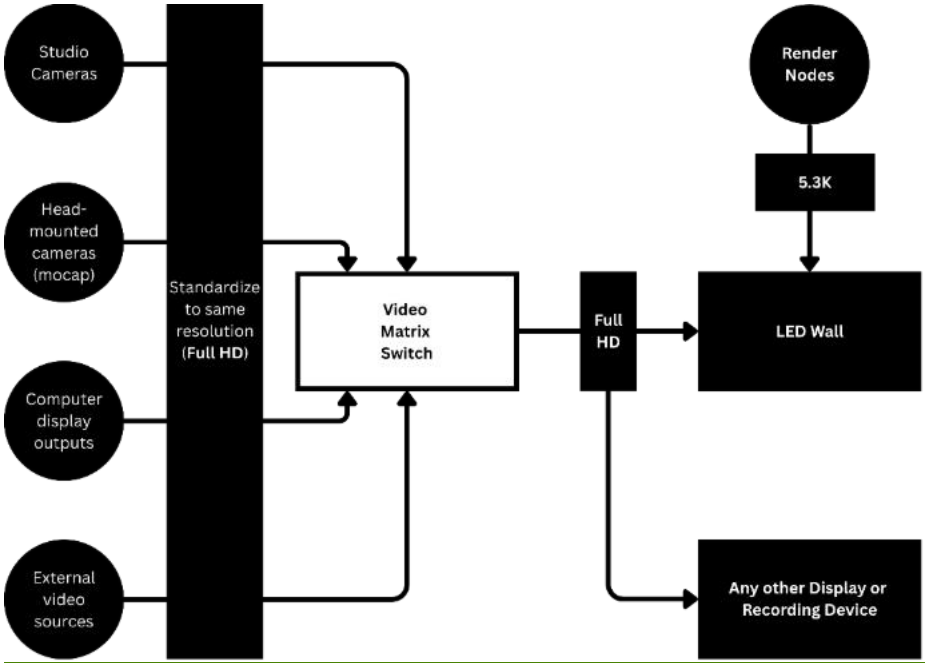

Figure 1: Current Video Signal Pathing in the Void (Source: Paul Kiama Irungu, 2026)

Technical Documentation

Boutellier and Raptis (2023) emphasise that a lack of 'robust knowledge' in the field means curriculum development is difficult. Ferley and Irungu similarly discovered this issue with a significant lack of VP documentation; what the students did find was highly technical and focused on specific company applications, thus part of their 'hands-on learning' required decoding the manuals.

Although both graduates appreciate learning-through-practice because "there's no documentation, no great solutions [on] how to set up a medium-sized virtual production studio, especially in an educational space" (Ferley and Irungu, 2025), the lack of clear support documents was frustrating. Epic Games has published a basic guide to using their software, Unreal Engine, but it is too general and designed for a range of hardware combinations in several types of studios. Thus, for students working in a specific volume like The Void, it can take time to learn exactly how to apply the guide to their setup. Large studios will not release information about their specific setups, likely due to concerns about intellectual property theft and competition while Unreal Engine's documentation is limited. This is a liability for tertiary institutions and their ability to train the next generation of filmmakers when preparing students for working environments.

Perforce and Network Security

To utilise the Render Nodes effectively for rendering 3D content on the LED wall, a robust method of project file synchronisation is required to allow for display synchronisation and real-time, multi-user scene editing over the network. Mackness and Bevan recommended Perforce to Information and Digital Services (IDS) as The Void's chosen version control software. This program integrates natively with Unreal Engine to enable easy project file syncing and real-time multi-user editing of virtual scenes across multiple computers, which is necessary for rendering 3D content on the LED wall. However, IDS needed to run several security protocols and tests, so they took a full academic year to greenlight the software. Perforce is a third-party program with potential vulnerabilities requiring elevated network permissions to be able to copy data over the university network. Ultimately, IDS minimised any risks by giving The Void its own isolated network, allowing more flexibility for software installations without compromising the wider university network. Understandably, IDS is deeply concerned with protecting sensitive information contained within the university and aim to prevent any network security risks; however, for The Void and fast-moving VP training, the wait for approval potentially caused lost education and creative research time for students and academics. This cautiousness extended to any requested updates to firewall and networking settings, as well as extended access to any third-party mobile devices. This type of security concern is likely dealt with in a more seamless manner in commercial VP studios.

Non-Technical Constraints: Access Limitations to Space and Internet

Ferley and Irungu often had limited access to special facilities and equipment in general. The Void, unsurprisingly, is a high demand space booked throughout the semester for teaching, research and industry projects. The students needed significant amounts of time in the space for their own R&D outside of the standard hours granted to their entire cohort. This was problematic since semester schedules are determined months in advance and it was their last semester of study. They were eventually granted after-hours access thanks to Bevan's guarantee which enabled the completion of their improvement project. However, the University locks down their computing facilities, leaving students limited access to make system changes, and requested access did not solve this issue. Usually, students utilise provided workstations and programs to create their projects in and outside The Void. Diving into hardware configuration as well as accessing internal University networks was a necessary, albeit unconventional, request of Ferley and Irungu. Every bit of access required the direct intervention of either Mackness or IDS themselves for the most critical changes. The pair noted that the current arrangement leaves students or researchers waiting for a long time, which is in stark contrast to the quick pace of innovation needed to remain relevant in the wider virtual production space.

The Actions Taken

First, Ferley and Irungu spent a semester familiarising themselves with the Render Nodes and The Void's systems; this required decoding highly technical, company-specific manuals, when they were able to find documentation. Using their practice-based iterative approach, Ferley and Irungu found that software solutions were often proprietary, thus using specific industry 'jargon' that they had to decode (Ferley and Irungu, 2025). As part of their iterative process, Ferley and Irungu used ChatGPT to help them understand specific error messages, debug logs, and other codes when documentation was scarce. They would then implement recommendations until errors resolved. Since VP volumes have unique firewall settings and display set-ups, there are never 'out of the box solutions', especially in university spaces with a range of hardware and software implemented.

Fortunately, after more than a semester of working closely with IDS to negotiate their position, and with the support of their supervisors Mackness and Bevan, Ferley and Irungu report that the IDS team understood and agreed with their position, granting them after-hours access to The Void as well as temporary admin access to make limited software configurations. This demonstrated the serious institutional struggle of working creatively within a space that requires secure network access.

Stage App and VCam App

With greater competency to make alterations to The Void's hardware and software configurations and the establishment of an isolated secure network, the Virtual Production apps, Stage and VCam, were easily integrated.

The Stage App provides a window-like view into the Unreal scene, allowing the user to manipulate lighting, placement, and other design features. It can also be used to view the virtual world while outside of The Void. The tablet-based perspective typically aligns with what will be viewable on the LED walls within the space, so users have a point of reference in the volume while gaining a different perspective in the app. It also allows the user to rotate their perspective around the space, effectively providing virtual location scouting. With the VCam app, Directors can traverse the digital scene with their phone or a tablet, as the app has spatial tracking; the interface allows setting changes for the virtual camera and can record the tracked shot. Ferley and Irungu write that this technology could offer significant benefit for virtual location scouting, allowing the "director and Director of Photography (DOP) to preview and spatially understand the scene … Even before the shoot, it is possible to preview the scene offline, enabling better preparation and faster

decision-making" (Ferley and Irungu, 2025). In the end, Ferley and Irungu succeeded by researching missing documentation, working around The Void's various academic and industry schedules, and negotiating with IDS department to resolve network access issues.

The Learnings Generated

Ferley and Irungu not only acquired new knowledge for themselves as aspiring professionals in the virtual production space but documented the specific knowledge they gained as pertains to The Void for the future users of the space. The process led them to develop a virtual production studio guidebook and recommendations for continued improvements in The Void.

Perforce: The Void, and any similar stage, requires a dedicated Perforce server, preferably one with substantially more storage and I/O to serve more connected clients better, rather than running on the main stage control PC where it bottlenecks the storage drive and CPU, slowing down processes.

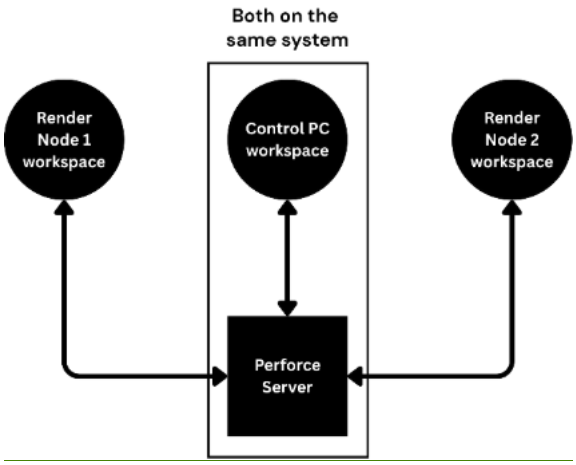

Figure 2: Current Perforce Implementation in The Void (Source: Paul Kiama Irungu, 2026)

Additionally, Flinders University students constantly work on collaborative projects together; however, the university lacks any version control for student productions within its labs and creative spaces. This makes collaboration significantly more cumbersome, prevents students from working on the same project at the same time, and increases the risk of losing files and creating merging conflicts when it comes time to bring everything together. Setting up Perforce (or any other version control solution) university-wide would resolve this issue, as well as allow the easy transfer of projects into and out of The Void.

Similar Wall and Render Node configuration: Several of the complications that arose when setting up the Render Nodes and establishing synchronisation between them were

caused by their minor hardware differences and the different sizes of the wall segments that needed to be synced with the limited methods available to them. For ease of set-up, the hardware and software setup running on the Render Nodes should be as identical as possible.

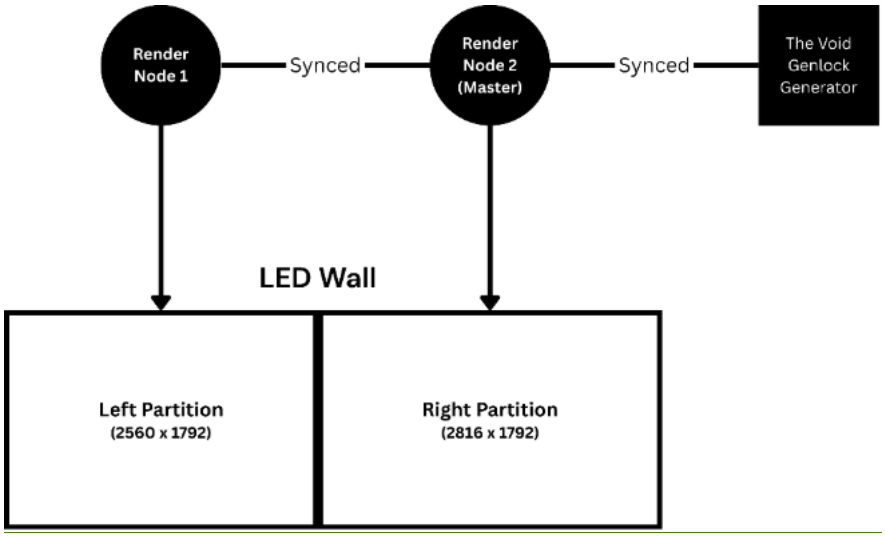

Figure 3: Current Render Node Configuration (Source: Paul Kiama Irungu, 2026)

Camera crown, object tracker and software-side smoothing: While looking into solutions for the camera tracking jitter, they discovered that specific camera crowns exist for optical motion capture systems, to ensure the rock-solid stability of camera tracking. Specifically, Vicon introduced their Active Crown to solve this exact problem. Enabling 'Object Tracker' in Vicon Shogun Live and damping the camera motion in Unreal Engine with a custom Blueprint also yielded somewhat better results.

Flexible and optimised Unreal Engine scene layout: To fully utilise the benefits of real-time decision-making when doing In-Camera VFX on set, the Unreal Engine scene needs to be set up in an optimised and flexible manner. This allows for quick non-destructive changes that speed up decision making and production time all while balancing the framerate the scene can be rendered at in real time on the LED wall. The specific recommendations outlined in their report can benefit future productions in The Void.

Timecode into Unreal Engine: "Timecode is a fundamental element in professional film, broadcast, and virtual production workflows, as it ensures temporal alignment between different recording systems and media sources" the pair wrote (2025). Synchronising timecode between all the systems in The Void is not always needed; however, there have been projects which might benefit from such functionality in Unreal Engine. The Void

already had timecode available for its cameras, audio recording equipment, the Vicon motion capture system and sent to all the computers, so the last step was feeding it into Unreal Engine to be embedded in recordings for post-production.

Distribution of responsibilities: Currently, there is only a single editor workstation in The Void, thus no tasks can be conducted in parallel; one individual becomes responsible for major changes. Ferley and Irungu point out that "a more effective configuration would involve distributing this responsibility amongst 2 or 3 workstations and would significantly ease the process of collaboration and problem solving" (Ferley and Irungu, 2025).

Frame remapping (**ghost framing**): Frame remapping/ghost framing makes it possible for different cameras to see different image streams on the same LED wall by quickly switching between them on the wall and syncing each camera's capture to each image stream. The Void's controllers have this feature and can therefore be configured once a need arises. Further set up and testing will be required in the future.

Dedicated IDS Support Staff: In their final report, Ferley and Irungu suggested that IDS and The Void find a method of working more closely together to speed up future safety checks. If the university could supply a dedicated technician specifically to maintain The Void's software including Perforce, Unreal, and related plugins along with assisting Mackness on implementing more complex technical tasks, then The Void could provide greater industry-like functionality. Embedding this role within IDS could also enable a professional support service for industry professionals using the volume for their work, which helps financially support the space.

These outcomes provide a basis for the future of pedagogy in The Void by documenting the iterative practice-based methodology Ferley and Irungu applied to specific technical systems and to 'soft skill' problems like negotiating with hierarchies in the university system. There are also proposals for continued improvements moving forward. As discussed in the next section, this masters' project is not only practice-based but integrates what Bevan calls "involving the students as partners." This approach does not teach students technical skills by rote but supports their ability to learn how to learn.

Implications for Pedagogy in The Void

Ferley and Irungu's experiences highlight broader pedagogical implications for virtual production education within rapidly evolving technological environments. As educators responsible for virtual production teaching in The Void, Jason Bevan and Cameron

Mackness face the challenge of preparing students for an industry in which roles continually change. Mackness (2025) notes that educators and students both work with emerging technologies, meaning that teaching can quickly shift between relevance and obsolescence as new developments appear. In this context, a curriculum centred solely on mastering contemporary tools risks becoming outdated. Bevan (2025) describes an alternative approach in which students are introduced to a technology such as Unreal Engine or motion-capture workflows and then challenged to apply that knowledge to practical production problems. Rather than providing step-by-step instruction for every scenario, educators create conditions in which students learn through experimentation, investigation, and iterative problem-solving.

This approach positions students as active contributors to knowledge generation rather than passive recipients of instruction. Bevan describes this as 'involving the students as partners', recognising that the exploration of new workflows and technologies benefits both student learning and the continuing development of The Void. Ferley and Irungu's projects demonstrate that student-led experimentation can generate practical improvements to infrastructure, workflows, and documentation while simultaneously providing authentic learning experiences. The relationship becomes mutually beneficial: students develop the capacity to navigate unfamiliar technological challenges, while educators gain insights into emerging tools, workflows, and studio affordances.

The case study also demonstrates the value of documentation as a pedagogical outcome. Throughout their projects, Ferley and Irungu worked not only to improve the technical capabilities of The Void but also to leave resources that could support future users of the facility. As Irungu (2025) explains: "If we leave behind a setup guide, basically, it allows the virtual production output of all student and commercial projects to improve significantly, and I think that's the greatest benefit." The resulting documentation extends the educational impact of the project beyond the individual students involved. Future cohorts can learn from previous investigations, understand the rationale behind technical decisions, and build upon established knowledge rather than repeatedly solving the same problems. In this way, documentation becomes both a practical resource and a mechanism for sustaining practice-based learning within the studio environment.

The findings further suggest that exposing students to technical systems 'behind the scenes' reflects the realities of contemporary virtual production practice. In many VP environments, distinctions between creative, technical, supervisory, and operational roles are increasingly fluid. Students therefore benefit from understanding not only how to use

production technologies but also how those systems are configured, maintained, and adapted to changing production requirements. Ferley and Irungu's work required them to move between creative, technical, and research roles, mirroring the multidisciplinary nature of contemporary virtual production workflows.

Rather than seeking to replicate industry practice exactly, The Void functions as an experimental laboratory in which students learn to operate within uncertainty. The case study suggests that the educational value of virtual production facilities lies not simply in providing access to advanced technologies but in creating opportunities for students to investigate problems, develop solutions, collaborate across disciplines, and adapt to continual technological change. Such capabilities may ultimately prove more enduring than proficiency in any particular software package or hardware platform, providing graduates with the flexibility required to navigate an evolving screen-production landscape.

Conclusion: The Future of Volumes like The Void

As this case study has shown, The Void functions not simply as a training environment, but as a site of practice-based inquiry in which technologies, interdisciplinary workflows, and practical pedagogical approaches can be tested, adapted, and refined. While many university-based VP studios around Australia provide practice-based training for industry, The Void's position outside of Flinders' five colleges has led to unique interdisciplinary and inter-industry uses, giving students more educational opportunities. Through the major projects undertaken by Fabian Ferley and Paul Kiama Irungu, The Void became a space where technical development, creative practice, and student learning occur simultaneously, generating benefits for both the facility and its multiple users.

The work that students like Ferley and Irungu undertake in the space can directly benefit future students' hands-on learning. For example, Perforce will help future students collaborate on projects with version control in a central location linked to The Void; this allows distributed work while maintaining communication and training the students to appropriately manage iterations of their work. The close work with IDS created a bridge between two major technical hubs at Flinders, and while a dedicated IDS staff member would best support The Void's unique access needs, future students can build on this positive relationship to implement necessary updates. Finally, Ferley and Irungu's documentation can be used by future students to understand the technical specifications of the space, learn possible methods for solving problems, and determine areas for improvement, which can then be documented in a professional manner. In this context, technical challenges become opportunities for learning rather than obstacles to production and the outcomes of these challenges provides the basis for future learning processes.

Virtual production is characterised by continual technological change, shifting workflows, and evolving professional roles. Consequently, the most valuable educational outcomes are the development of transferable capabilities such as critical thinking, technical problem-solving, collaboration, documentation, and self-directed learning. Implementing hardware upgrades, for instance, has helped improve the quality of production within The Void, but these upgrades will require future updates. Ferley and Irungu note that updates like the Render Nodes, timecodes for Unreal Engine, and camera crown tracker with associated software will need ongoing maintenance, not just as the technology continues to evolve but between each student, academic, creative, or industry project within the space. This is an opportunity for students to learn important practical skills along with time management, negotiation, and deductive reasoning based on the resources Ferley and Irungu have developed.

University VP environments operate according to different priorities than commercial studios. While industry facilities typically optimise for efficiency, production outcomes, and established pipelines, educational facilities must accommodate a wider range of interactions from different stakeholders. Ferley and Irungu's experiences demonstrate how practice-based projects can immerse students in authentic production challenges while contributing meaningful improvements to institutional infrastructure. Looking ahead, the continued expansion of VP's interdisciplinary applications, such as into live performance or architectural rendering, suggest that The Void will remain an evolving platform rather than a fixed technological solution, thus continuing to support self-directed practice-based student learning and adaptability in stressful or unfamiliar situations. Ultimately, The Void's enduring value lies not in its capacity to reproduce a particular version of virtual production, but in its ability to evolve in response to new technologies, new users, and new creative possibilities.

References

Barnett, T., Wallin, Z., Bevan, J., and Mackness, C. (2025) 'Virtual Production Studio Environments for Teaching, Research, and Creative Practice: An Introduction', in T. Barnett, J. Bevan, C. Mackness, and Z. Wallin (eds.), *Beyond Virtual Production: Integrating Production Technologies*. Focal Press, pp. 1-11. Available at: DOI: 10.4324.9781003449492-1.

Bennett, G., Najafi, H., and Jackson, L. (2023) 'Pedagogical strategies for teaching Virtual Production pipelines', *SIGGRAPH Asia 2023 Educator's Forum*, vol. SA '23 (Article 11), p. 1–10. Available at: https://doi.org/10.1145/3610540.3627010.

Bevan, J. and Mackness, C. (2025) 'From an Unreal World to an Integrated One', in T. Barnett, J. Bevan, C. Mackness, and Z. Wallin (eds.), *Beyond Virtual Production: Integrating Production Technologies*. Focal Press, pp. 47-57, Available at: DOI: 10.4324.9781003449492-5.

Bevan, J. and Mackness, C. *Interview with Jason Bevan and Cameron Mackness on The Void*, interviewed by L. Nicol Cabe, 24 July 2025, Adelaide.

Boutellier, A. and Raptis, P. (2023) 'Teaching virtual production: the challenges of developing a formal curriculum', *Film Education Journal*, vol. 6 (issue 2), pp. 69–81. Available at: DOI: https://doi.org/10.14324/FEJ.06.2.01.

Chun Tie, Y., Birks, M., and Francis K. (2019) 'Grounded theory research: A design framework for novice researchers', *Sage Open Medicine*, vol. 2019 (issue 7). Available at: https://doi.org/10.1177/2050312118822927.

Cypress, B.S. (2015) 'Qualitative Research: The "What," "Why," "Who," and "How"!' *Dimensions of Critical Care Nursing*, vol. 34 (issue 6), pp. 356-361. Available at: https://doi.org/10.1097/dcc.0000000000000150.

Epic Games (2023) *Unreal Stage App | Getting Started*. Available at: https://dev.epicgames.com/community/learning/courses/OKO/unreal-engine-unreal-stage-app/jMlO/unreal-engine-unreal-stage-getting-started.

Ferley, F. and Irungu, P.K. with Bevan, J. *Interview with Fabian Ferley and Paul Kiama Irungu in The Void*, interviewed by L. Nicol Cabe, 17 July 2025.

Ferley, F. and Irungu, P.K. (2025) *Improving the Void*, master's thesis. Flinders University.

Kowlessar, J., Barnett, T., Kotarba-Morley, A.M., Burke, H., Moffat, I., and Edmonds, P. (2025) 'Photogrammetry and Geophysics for Archaeological and Historical Research Using Immersive Environments: The Case of Martindale Hall', in T. Barnett, J. Bevan, C. Mackness, and Z. Wallin (eds.), *Beyond Virtual Production: Integrating Production Technologies*. Focal Press, pp. 166-181. Available at: DOI: 10.4324.9781003449492-15.

Raimundo, J., Bessa, D., and Madureira, M. (2025) 'Teaching Virtual Production in Higher Education: Lessons Drawn from the VPSN Research Project', *Proceedings of CAGA24: The Conference of AG Animation 2024*, (issue 1). Available at: https://doi.org/10.54337/caga24-11173.

Rees Lewis, D. G., Carlson, S. E., Riesbeck, C. K., Gerber, E. M., and Easterday, M. W. (2023) 'Encouraging engineering design teams to engage in expert iterative practices with tools to support coaching in problem-based learning', *Journal of Engineering Education*, volume 112(issue 4), pp. 1012–1031. Available at: https://doi.org/10.1002/jee.20554

Swords, J., and Willment, N. (2024) 'The emergence of virtual production – a research agenda', *Convergence: The International Journal of Research into New Media Technologies*, vol. 30 (issue 5), pp. 1557-1574. Available at: https://doi.org/10.1177/13548565241253903.

List of Figures

Figure 1: Current Video Signal Pathing in the Void (Source: Paul Kiama Irungu, 2026)
Figure 2: Current Perforce Implementation in The Void (Source: Paul Kiama Irungu, 2026)
Figure 3: Current Render Node Configuration (Source: Paul Kiama Irungu, 2026)
Figure 4: Photo of The Void after many updates including the curved screen, some of the motion trackers (visible above the screen), and one of the theatre lights (Source: L. Nicol Cabe, 2025).

Appendix A

Improvements in The Void included a new, curved 21-panel wide, seven-panel high 1.9mm pixel pitch LED wall with a 3:1 aspect ratio, each comprised of 256x256 pixels arranged in a maximum 84-degree curvature with a total resolution of 5376x1792 at a maximum refresh rate of 120hz. The large, vibrant screen is paired with the existing Vicon motion capture setup, two hardware synced Render Nodes with Nvidia RTX A5500 GPUs, a control system with Nvidia's high-end RTX A6000 GPU, Unreal Engine and other software, and LED lighting tools (Ferley and Irungu, 2025).



Figure 4: Photo of The Void after many updates including the curved screen, some of the motion trackers (visible above the screen), and one of the theatre lights (Source: L. Nicol Cabe, 2025).

Appendix B

State of Virtual Production Education in Universities in Australia, 2026

University	Facility	Location	LED / VP capability	Mocap / XR	Current status
Flinders University	**The Void**	Bedford Park, SA	8 × 3 m, 1.9 mm LED wall, Unreal Engine	20 × Vicon Vantage V8, Faceware, Shogun	Operational
University of Melbourne	**LED Volume Studio**	Southbank, VIC	4 × 10 m, 1.5 mm LED wall + two 2.4 m^2 side walls	Camera tracking, photogrammetry, real-time graphics	Operational
Deakin University	**Deakin Virtual Production Studio / Deakin Studios**	Burwood, VIC	Large LED-volume facility; 683 ROE Black Pearl panels, **planned** 26 × 6 m wall	Motion-control camera rig, Unreal Engine	Unknown
Queensland University of Technology	**QUT Virtual Production Studio**	Kelvin Grove, QLD	10 m-wide LED wall, real-time environments	Camera/object tracking, Unreal Engine	Operational since 2019
Griffith University	**Mediated Realities Studio**	Brisbane, QLD	ICVFX stage with ROE Black Pearl LED + Megapixel Helios	Vicon, Rokoko, volumetric capture, photogrammetry, holographic displays	Operational
Swinburne University of Technology	**Swinburne Virtual Universe**	Melbourne, VIC	100+ m^2, 45 MP stereoscopic LED wall	Real-time GPU rendering / immersive environments	Operational; No Information on VP use
Adelaide University	**TV & Virtual Production Studio**	Adelaide, SA	Virtual-production studio; green screen / studio infrastructure	VR and Adelaide Lab for Immersive Technologies	Operational

*Information gathered from university websites.